嘉尼企業股份有限公司CANAL ELECTRONIC CO.,LTD.

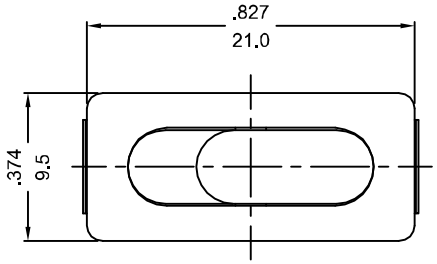

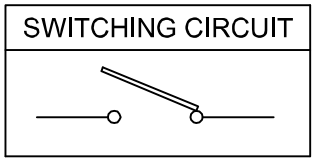

ROCKER SWITCH MODEL MR SERSIE

RATING: 12(4)A 125/250V~ (cURus , ENEC15)
10(4)A 250V~T125/55 (CQC)
DIELECTRIC WITHSTAND VOLTAGE:1500VAC FOR 1 MINUTE
INSULATION RESISTANCE:500VDC 100M Ω (MIN.)
CONTACT RESISTANCE: 20mΩ INITIAL(MAX.)

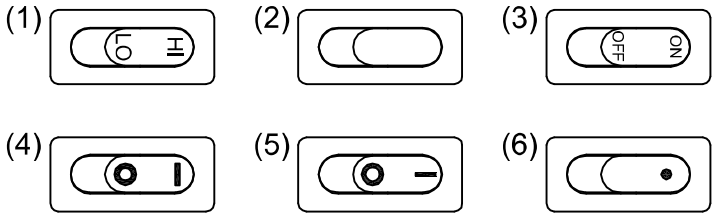

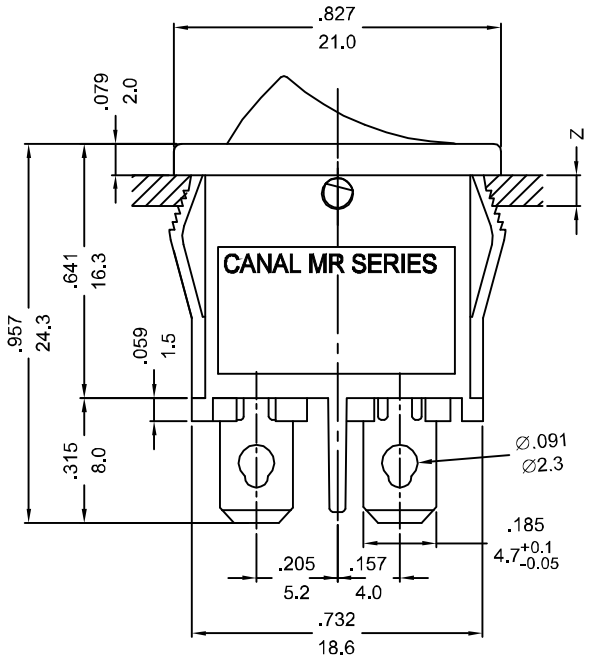

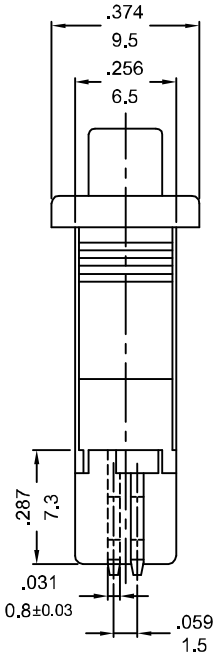

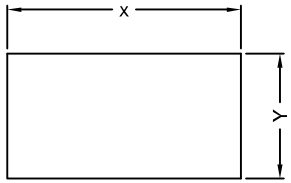

PANEL CUTOUT DIMENSION TABLE

X(CUTOUT DIMENSION)	Y(CUTOUT DIMENSION)	Z(PANEL THICKNESS)
19.2 $^{+0.15}_{-0}$ mm	6.65~6.75mm	0.75~1.25mm
19.4 $^{+0.15}_{-0}$ mm	6.65~6.75mm	1.25~2mm
19.8 $^{+0.15}_{-0}$ mm	6.65~6.75mm	2~3mm

NOTE: TOLERANCES UNLESS OTHERWISE SPECIFIED: ± .012/0.3 (in/mm)

MODEL NO, SEE NUMBER SYSTEM

REVISION	DESCRIPTION	REVISED BY	TOLERANCES				ANGLE ½°	UNIT	mm	PART NAME	MR SPEC DRAWING	DWG NO
4			DRAWN BY	謝平凡	DESIGNED BY	蔡 劍	SCALE	2/1				S5944A
3												
2			CHECKED BY	蔡劍	APPROVED BY	蔡劍	DATE	2015.02.11		PART NO	MR-H11C**-N**B-1FNC (61058)	
1 2015.02.11	依61058-1，首次出圖	謝平凡										